SELLOPAC
ingeniería en sistemas de sellado

# SELLO MECANICO SP-ROTEN Tipo 2 y U2

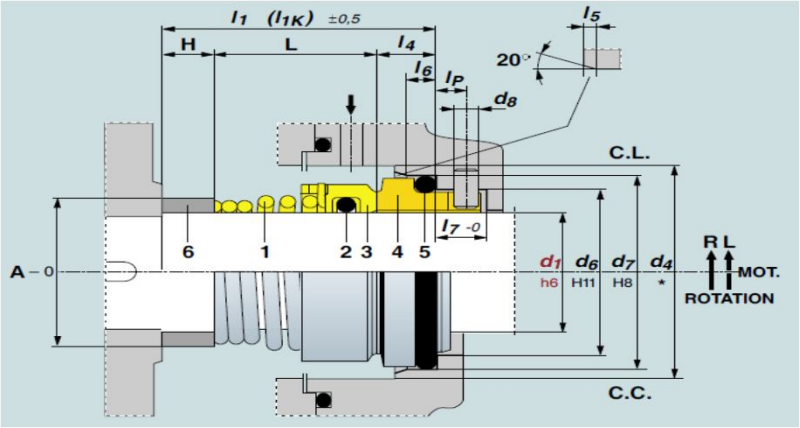


| Tipo 2, 2H, U2 | | | | | | | | | | | | 2MC | |
|---|---|---|---|---|---|---|---|---|---|---|---|---|---|
| d1 | d6 | d7 | d4 | l1 | L | l4 | l6 | l5 | d8 | l7 | lp | l1 | L |
| 6 | 10.6 | 13.1 | 16 | 19.5 | 15 | 4.5 | 2 | 1.2 | 2 | 6 | 3.5 | - | - |
| 7 a 9 | 13 | 17.1 | 20 | 20.5 | 15 | 5.5 | 2.8 | 1.2 | 2 | 6.2 | 3.5 | 15.5 | 10 |
| 10 | 14 | 18.1 | 21 | 20.5 | 15 | 5.5 | 2.8 | 1.2 | 2 | 6.2 | 3.5 | 17.5 | 12 |
| 11 y 12 | 16.5 | 20.6 | 24 | 23.5 | 18 | 5.5 | 2.8 | 1.2 | 2 | 6.2 | 3.5 | 19.5 | 14 |
| 13 y 14 | 19 | 23.1 | 27 | 28 | 22 | 6 | 2.8 | 1.2 | 2 | 6.7 | 4 | 23 | 17 |
| 15 | 231 | 26.9 | 31 | 29 | 22 | 7 | 3.7 | 1.3 | 2.5 | 7.6 | 4 | 24 | 17 |
| 16 y 17 | 21 | 26.9 | 31 | 30 | 23 | 7 | 3.7 | 1.3 | 2.5 | 7.6 | 4 | 25 | 18 |
| 18 | 25 | 30.9 | 36 | 32 | 24 | 8 | 3.7 | 1.3 | 3 | 8.5 | 4.5 | 26 | 18 |
| 19 y 20 | 25 | 30.9 | 36 | 33 | 25 | 8 | 3.7 | 1.3 | 3 | 8.5 | 4.5 | 28 | 20 |
| 21 y 22 | 30 | 35.4 | 41 | 33 | 25 | 8 | 3.7 | 1.8 | 3.5 | 8.5 | 5 | 28 | 20 |
| 23 y 24 | 30 | 35.4 | 41 | 35 | 27 | 8 | 3.7 | 1.8 | 3.5 | 8.5 | 5 | 30 | 22 |
| 25 a 27 | 33 | 38.2 | 45 | 35.5 | 27 | 8.5 | 3.7 | 1.8 | 4 | 9.1 | 5 | 29.5 | 21 |
| 28 | 38 | 43.3 | 50 | 38 | 29 | 9 | 3.7 | 1.8 | 4 | 9.6 | 6 | 31 | 22 |
| 29 a 32 | 38 | 43.3 | 50 | 39 | 30 | 9 | 3.7 | 1.8 | 4 | 9.6 | 6 | 32 | 23 |
| 33 y 34 | 45 | 53.5 | 60 | 50.5 | 39 | 11.5 | 5.4 | 2.1 | 5 | 12 | 7.5 | 41.5 | 30 |
| 35 a 37 | 45 | 53.5 | 60 | 50.5 | 39 | 11.5 | 5.4 | 2.1 | 5 | 12 | 7.5 | 41.5 | 30 |
| 38 a 43 | 52 | 60.5 | 68 | 50.5 | 39 | 11.5 | 5.4 | 2.1 | 5 | 12 | 7.5 | 41.5 | 30 |
| 44 a 49 | 57 | 65.5 | 72 | 52.5 | 41 | 11.5 | 5.4 | 2.1 | 5 | 13 | 8.5 | 42.5 | 31 |

| Tipo 2, 2H, U2 | | | | | | | | | | | | 2MC | |
|---|---|---|---|---|---|---|---|---|---|---|---|---|---|
| d1 | d6 | d7 | d4 | l1 | L | l4 | l6 | l5 | d8 | l7 | lp | l1 | L |
| 50 | 64 | 72.5 | 80 | 56.5 | 45 | 11.5 | 5.4 | 2.1 | 5 | 13 | 8.5 | 46.5 | 35 |
| 55 | 64 | 72.5 | 80 | 58.5 | 47 | 11.5 | 5.4 | 2.1 | 5 | 13 | 8.5 | 48.5 | 37 |
| 60 | 72 | 79.3 | 87 | 60.5 | 49 | 11.5 | 5.4 | 2.1 | 5 | 13.5 | 8.5 | 48.5 | 37 |
| 65 | 77 | 84.5 | 92 | 62.5 | 51 | 11.5 | 5.4 | 2.1 | 5 | 13.5 | 8.5 | 50.5 | 39 |
| 70 | 82 | 89.5 | 97 | 62.5 | 51 | 11.5 | 5.4 | 2.1 | 5 | 13.5 | 8.5 | 50.5 | 39 |
| 75 | 87 | 94.5 | 102 | 68.5 | 57 | 11.5 | 5.4 | 2.1 | 5 | 13.5 | 8.5 | 57.5 | 46 |
| 80 | 92 | 99.5 | 107 | 70.5 | 59 | 11.5 | 5.4 | 2.1 | 5 | 13.5 | 8.5 | 59.5 | 48 |
| 85 | 98 | 105.5 | 113 | 72.5 | 59 | 13.5 | 5.4 | 2.6 | 5 | 13.5 | 8.5 | 59.5 | 46 |
| 90 | 105 | 111.5 | 120 | 75.5 | 62 | 13.5 | 5.4 | 2.6 | 5 | 13.5 | 8.5 | 62.5 | 49 |
| 95 | 110 | 116.5 | 130 | 75.5 | 62 | 13.5 | 5.4 | 2.6 | 5 | 13.5 | 8.5 | 64.5 | 51 |
| 100 | 114 | 119.5 | 136 | 88.5 | 75 | 13.5 | 5.4 | 2.6 | 5 | 13.5 | 8.5 | 78.5 | 65 |
| 110 | 154 | 132.2 | 150 | 92.5 | 75 | 17.5 | 7.1 | 3.9 | 5 | 13.5 | 8.5 | 78.5 | 61 |
| 120 | 134 | 142.2 | 160 | 102.5 | 85 | 17.5 | 7.1 | 3.9 | 5 | 13.5 | 8.5 | 90.5 | 73 |
| 130 | 145 | 153.2 | 172 | 112.5 | 95 | 17.5 | 7.1 | 3.9 | 5 | 13.5 | 8.5 | 99.5 | 82 |
| 135 | 152 | 161.2 | 180 | 113.5 | 95 | 18.5 | 7.1 | 3.9 | 5 | 13.5 | 8.5 | 101.5 | 83 |
| 140 | 157 | 164.3 | 185 | 118.5 | 100 | 18.5 | 7.1 | 3.9 | 5 | 13.5 | 8.5 | 108.5 | 90 |
| 150 | 167 | 174.2 | 200 | 128.5 | 110 | 18.5 | 7.1 | 3.9 | 5 | 13.5 | 8.5 | 118.5 | 100 |
| 160 | 168 | 195 | 220 | 141 | 120 | 21.0 | 9.1 | 3.9 | 5 | 13.5 | 8.5 | 121.0 | 100 |

## DESCRIPCION DEL PRODUCTO

En este Sello la carcaza y cara rotativa estan integrados y sus elementos de sellado secundario tanto de la cabeza rotatoria como la cara estacionaria son Oring, su resorte es cónico y con arrastre positivo. Depende de la dirección de rotación, para surtirse izquierdo o derecho. Su aplicación es universal, insensible a bajo contenido de sólidos, no daña el eje ya que no usa tornillos de ajuste. Cuando los materiales son carburos las caras de

## CONDICIONES DE OPERACION

*Temperatura: -20°C a +180°C / -4°F a +356°F.
*Presiones: 12 bar / 174 psig *Velocidad: 15 m/s (50 ft/s) ( Dependen de configuración y tamaño del eje)

## PRINCIPALES APLICACIONES

En todo proceso de la industria que use agua y la tecnología de aguas residuales, industria química, industria alimenticia y de bebidas, bajo contenido de sólidos y bombas de aguas residuales, bombas sumergibles, químicos estándar , bombas de tornillo excéntrico, bombas de agua de refrigeración.

# SP-ROTEN

## TYPE 2 with open cave

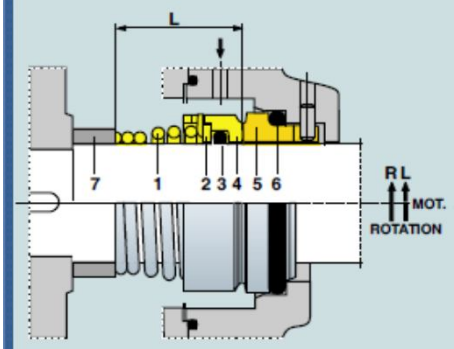


## TYPE U2 with driving sleeve

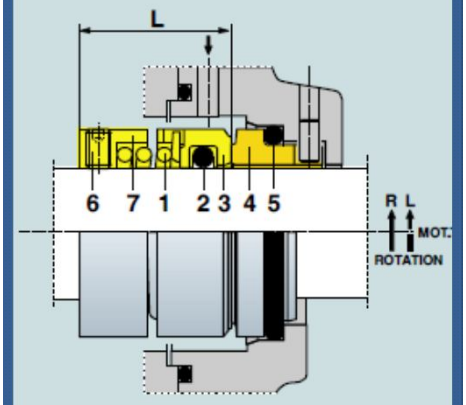


## Ventas y Centros de Servicio


**Sucursal Metropolitana**
Calz. Vallejo 489 Esq. Cuitlahuac, Mex. DF.
Tel.: (55) 5355 6906, 5355 4605

**Sucursal del Bajio**
Madroño No. 430. San Luis Potosi, SLP.
Tel.: (444) 2980 865, (55) 4330 5551

**Sucursal Oriente**
Ignacio Allende No. 114-1 Puebla , Pue.

**Sucursal Poniente**
Paseo del Cedro Mz. 19 Lote 67-A Lerma. Toluca.
Tel.: (722) 180 3092 / 199 1656

ventas@sellopac.com
www.sellopac.com.mx